ITALiana valvole industriali torino srl

Settore industriale

I.V.I.T. S.r.l.
SEDE LEGALE: Corso Massimo D'Azeglio, 60 H 10126 Torino (TO)
SEDE OPERATIVA: Via Bologna, 220 – 10154 Torino (TO) – ITALY –
tel. 011.19323297 fax. 011.19323296 Email: info@ivit.it
P.IVA: 10818090010

ITALiana valvole industriali torino srl

I.V.I.T. S.r.l.
SEDE LEGALE: Corso Massimo D'Azeglio, 60 H 10126 Torino (TO)
SEDE OPERATIVA: Via Bologna, 220 – 10154 Torino (TO) – ITALY –
tel. 011.19323297 fax. 011.19323296 Email: info@ivit.it
P.IVA: 10818090010

ITALiana valvole industriali torino srl

API 6D-0748 | API 607-208401 | CE C003857-001 | ISO 9001:2008 | ISO 14001-2004 | OHSAS 18001

COMPANY INTRODUCTION

I.V.I.T. S.r.l.
SEDE LEGALE: Corso Massimo D'Azeglio, 60 H 10126 Torino (TO)
SEDE OPERATIVA: Via Bologna, 220 – 10154 Torino (TO) – ITALY –
tel. 011.19323297 fax. 011.19323296 Email: info@ivit.it
P.IVA: 10818090010

ITALiana valvole industriali torino srl

Di recente costituzione, la **IVIT srl** è un'azienda leader nella produzione di saracinesche, valvole di ritegno e valvole a farfalla, così come nei giunti universali, giunti flangiati usati comunemente in impianti di acque potabili e fognatura, nel gas naturale e in processi industriali.

Il nostro range di prodotti copre diametri da 40 fino a 2000 mm con pressioni nominali fino a 40 Kg/cm^2 in accordo con DIN, ISO, BS5163, ANSI, JIS, API, GOST.

Il fine di questo catalogo è di informare I nostri clienti riguardo l'ampio range dei nostri pezzi speciali e valvole.

Nel campo dei giunti universali e dei giunti flangiati, copriamo diametri esterni fino a 845 mm e tolleranze fino a 235 mm. Questi dati sono validi per qualsiasi tipologia di tubazione.

Con questa ampia gamma di prodotti la IVIT vi offre il più completo range di giunti e pezzi speciali ed il nostro team è in continuo aggiornamento riguardo alle esigenze di mercato e le richieste del mercato verso future innovazioni.

Non esitate a contattarci per qualsiasi suggerimento o domanda riguardo ai nostri prodotti, saremo felici di darvi una risposta!

I.V.I.T. S.r.l.
SEDE LEGALE: Corso Massimo D'Azeglio, 60 H 10126 Torino (TO)
SEDE OPERATIVA: Via Bologna, 220 – 10154 Torino (TO) – ITALY –
tel. 011.19323297 fax. 011.19323296 Email: info@ivit.it
P.IVA: 10818090010

I.V.I.T. S.r.l.
SEDE LEGALE: Corso Massimo D'Azeglio, 60 H 10126 Torino (TO)
SEDE OPERATIVA: Via Bologna, 220 – 10154 Torino (TO) – ITALY –
tel. 011.19323297 fax. 011.19323296 Email: info@ivit.it
P.IVA: 10818090010

ITALiana valvole industriali torino srl

Research & Design

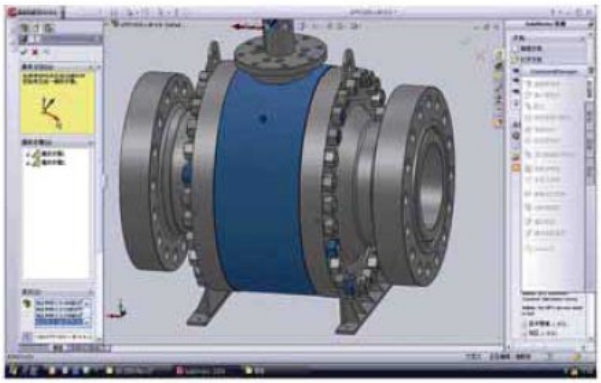

As a result of a new idea from the R&D Department, the CAD/CAM design is done in computerized software. The design is done both in 2D and 3D drawings and it allows u to visualize the product, to clearly see the dimensions and to construct the molding with CAM systems in CNC Machines. As a result, dimensions of the molds are exactly what it needs to be.

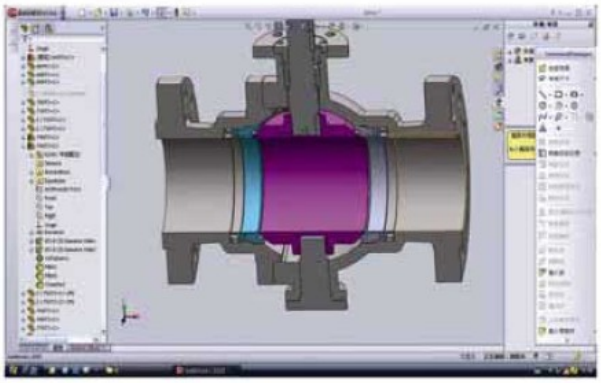

Solid Works Software allows us to analyze the characteris of the valve without even manufacturing it. Simulations made on the 3D drawing of the valve enable us to identify the points of development. Therefore we can act quickly and revise the design on computer in case there is a deve opment opportunity. This assures we develop the most ide design. With Solid Works Software, we can analyze finite-element , The product can be improved.

To make a suit solution ,We also supply custom-made ser vice .

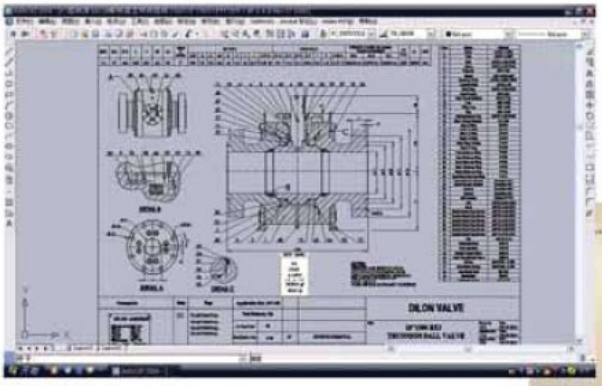

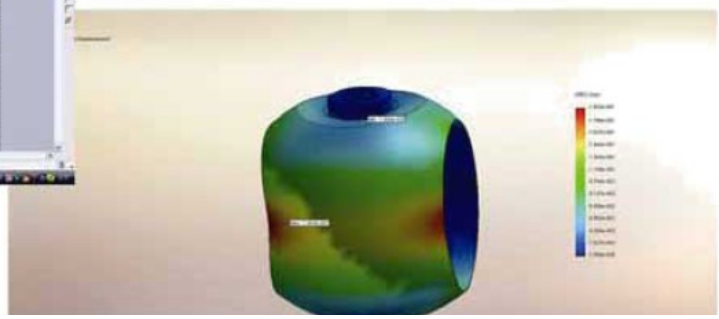

I.V.I.T. S.r.l.
SEDE LEGALE: Corso Massimo D'Azeglio, 60 H 10126 Torino (TO)
SEDE OPERATIVA: Via Bologna, 220 – 10154 Torino (TO) – ITALY –
tel. 011.19323297 fax. 011.19323296 Email: info@ivit.it
P.IVA: 10818090010

ITALiana valvole industriali torino srl

Equipment

Vertical Lathe

Vertical Lathe

Horizontal Lathe

Drilling Machine

Engine Lathe

Horizontal Lathe

CNC Machine

NC lathe

CNC Machine

I.V.I.T. S.r.l.
SEDE LEGALE: Corso Massimo D'Azeglio, 60 H 10126 Torino (TO)
SEDE OPERATIVA: Via Bologna, 220 – 10154 Torino (TO) – ITALY –
tel. 011.19323297 fax. 011.19323296 Email: info@ivit.it
P.IVA: 10818090010

ITALiana valvole industriali torino srl

Inspection equipment

Material Analysis

PMI Material Analysis

Chemical Analysis

Low Temperature Testing

Tensile Tester

Impact Test

Hardness Test

Wall Thickness Test

Roughness Tester

Paint film thickness Test

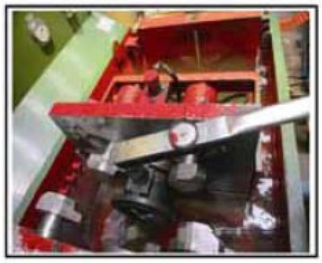

Torque Test

HIC Test

I.V.I.T. S.r.l.
SEDE LEGALE: Corso Massimo D'Azeglio, 60 H 10126 Torino (TO)
SEDE OPERATIVA: Via Bologna, 220 – 10154 Torino (TO) – ITALY –
tel. 011.19323297 fax. 011.19323296 Email: info@ivit.it
P.IVA: 10818090010

ITALiana valvole industriali torino srl

Magazzino

I.V.I.T. S.r.l.

SEDE LEGALE: Corso Massimo D'Azeglio, 60 H 10126 Torino (TO)

SEDE OPERATIVA: Via Bologna, 220 – 10154 Torino (TO) – ITALY –

tel. 011.19323297 fax. 011.19323296 Email: info@ivit.it

P.IVA: 10818090010

ITALiana valvole industriali torino srl

Ball Valves

Trunnion Mounted Ball Valves

Design Feature:

- Side Entry Design, Top Entry Design.
- Bolted Body Or Fully Welded Body.
- Full Bore Or Reduced Bore.
- Flanged End Or Welding End.
- Double Block And Bleed.
- Locking Device.
- Single Piston Effect , Double Piston Effect.
- Automatic Internal Relief Of Body Pressure.
- Emergency Sealant Injection System.
- Fire Safe Design. Antistatic Device.
- Anti-Blowout Stem Design.
- Body Vent Device.
- Stem Extension For Underground Service.

Product Range :

- Size: NPS 2"~ 48" , DN 50-1200
- Pressure Rating: Class 150 -2500 LB , PN 10~400
- Design standard : API 6D , EN13942
- Face To Face Dimension : API 6D , EN 558-1, EN 12982
- Connecting Dimensions : ASME B16.5 , ASME B16.47 ASME B 16.25 , EN 1092-1 , EN 12627.
- End Connection : Flange ,BW.
- Body Materials : Carbon steel , Stainless Steel , Duplex Stainless Steel , Special Alloy .

Floating Ball Valves

Design Feature:

- Side Entry Design, Top Entry Design.
- One piece,Two Pieces, Three Pieces Body.
- Full Bore Or Reduced Bore.
- Flanged End Or Welding End.,Screw end.
- Locking Device.
- Fire Safe Design. Antistatic Device.
- Anti-Blowout Stem Design.
- Pressure Balance Hole In Ball
- Postive Shut-Off
- ISO 5211 Mounting Flange For Actuatort.
- Stem Extension For Underground Service.

Product Range :

- Size: NPS 1/2"~ 8" , DN 15-200
- Pressure Rating: Class 150 -1500 LB , PN 10~250
- Design standard : API 6D , BS 5351,DIN 3357.
- Face To Face Dimension : API 6D , EN 558-1, EN 12982 BS 5351 , ASME B 16.10.
- Connecting Dimensions : ASME B16.5 , ASME B16.47 ASME B 16.25 , ASME B1.20.1,EN 1092-1 , EN 12627.
- End Connection : Flange , BW ,SW ,NPT.
- Body Materials : Carbon steel , Stainless Steel , Duplex Stainless Steel , Special Alloy .

I.V.I.T. S.r.l.
SEDE LEGALE: Corso Massimo D'Azeglio, 60 H 10126 Torino (TO)
SEDE OPERATIVA: Via Bologna, 220 – 10154 Torino (TO) – ITALY –
tel. 011.19323297 fax. 011.19323296 Email: info@ivit.it
P.IVA: 10818090010

ITALiana valvole industriali torino srl

Gate ,Globe Valves

Gate Valves

Design Feature:

- Bolt bonnet or Pressure seal bonnet design.
- Casting or forged body.
- Full port or reduced port design.
- Back seal design.
- Stem is one-piece wrought material.
- Flexible wedge gate , Solid wedge gate.
- Outside Screw and Yoke .
- Rising stem and non-rising stem
- Renewable Seat or welding Seat.
- Special request : Locking device ,Position indicator. Limit Switch.
- Extend bonnet For underground Service.

Product Range :

- Size: NPS 2"~ 48" , DN 50-1200
- Pressure Rating: Class 150 -2500 LB , PN 10~400
- Design standard:API 600 ,ASME B16.34,ISO 10432,EN1984.
- Face To Face Dimension: ASME B16.10,EN 558-1,EN 12982
- Connecting Dimensions : ASME B16.5 , ASME B16.47 ASM B 16.25 , EN 1092-1 , EN 12627.
- End Connection : Flange, BW .
- Body Materials : Carbon steel , Stainless Steel , Alloy Steel. Duplex Stainless Steel , Special Alloy .

Globe Valves

Design Feature:

- Bolt bonnet or Pressure seal bonnet design.
- Casting or forged body.
- Full port or reduced port design.
- Back seal design.
- Stem is one-piece wrought material.
- Tapered disc , Flat disc.,Regulating Disc, Parabolic disc.
- Outside Screw and Yoke .
- Rising stem and non-rising stem
- Renewable Seat or welding Seat.
- Special request : Locking device ,Position indicator. Limit Switch.
- Extend bonnet For underground Service.

Product Range :

- Size: NPS 1/2"~ 24" , DN 15-600
- Pressure Rating: Class 150 -2500 LB , PN 10~400
- Design standard : BS 1873,EN13709 , ASME B16.34
- Face To Face Dimension : ASME B16.10 ,EN 558-1, EN 12982
- Connecting Dimensions : ASME B16.5 , ASME B16.47 ASM B 16.25 , EN 1092-1 , EN 12627.
- End Connection : Flange,BW.
- Body Materials : Carbon steel , Stainless Steel ,Alloy Steel. Duplex Stainless Steel , Special Alloy .

I.V.I.T. S.r.l.
SEDE LEGALE: Corso Massimo D'Azeglio, 60 H 10126 Torino (TO)
SEDE OPERATIVA: Via Bologna, 220 – 10154 Torino (TO) – ITALY –
tel. 011.19323297 fax. 011.19323296 Email: info@ivit.it
P.IVA: 10818090010

ITALiana valvole industriali torino srl

Butterfly ,Wafer Check Valves

Butterfly Valves

Design Feature:

- Lug,wafer or double flange body.
- Concentric double eccentric or triple eccentric design. Lined body and disc (concentric butterfly).
- Rubber or PTFE seat ring (double eccentric butterfly).
- Multiple disc seal ring or integral stainless steel seal ring.. (Triple eccentric butterfly)
- Stem extension for underground.

Product Range :

- Size: NPS 2"~ 200" , DN 50-5000 mm
- Pressure Rating: Class 150 -600 LB , PN 10~100
- Design standard : API 609 , EN593 ,MSS SP-67,AWWA C504.
- Face To Face Dimension : API 609 , MSS SP-67, MSS SP-68. EN 558-1 , EN 12982.
- Connecting Dimensions : ASME B16.5 , ASME B16.47 ASM B 16.25 , EN 1092-1 , EN 12627.
- Body Materials : Carbon steel , Stainless Steel ,Cast Iron. Duplex Stainless Steel , Special Alloy .

Wafer Check Valves

Design Feature:

- Light weight , Compact structure.
- Wafer lug double flange or lengthened body.
- Absolute spring action.
- One piece body
- Double disc or single disc.
- Metal to metal seal or flexible seal.

Product Range :

- Size: NPS 1/2"~ 48" , DN 15-1200 mm
- Pressure Rating: Class 150 -2500 LB , PN 10~400
- Design standard : API 6D ,API 594 .
- Face To Face Dimension : API 6D , EN 558-1.
- Connecting Dimensions : ASME B16.5 , ASME B16.47 ASM B 16.10 .
- End Connection : Flange.
- Body Materials : Carbon steel , Stainless Steel , Duplex Stainless Steel , Special Alloy .

I.V.I.T. S.r.l.
SEDE LEGALE: Corso Massimo D'Azeglio, 60 H 10126 Torino (TO)
SEDE OPERATIVA: Via Bologna, 220 – 10154 Torino (TO) – ITALY –
tel. 011.19323297 fax. 011.19323296 Email: info@ivit.it
P.IVA: 10818090010

ITALiana valvole industriali torino srl

Plug,Slab Gate Valves

Plug Valves

Design Feature:

- Full bore or reduced bore.
- Flanged end or welding End.
- Venturi Pattern or full port .
- The body back pressure balance structure.
  Inversion sealing (pressure balance plug valve).
- The body is loaded, PTFE Bushing seat (Bushing Plug valve).
- Anti blow out stem design.
- Locking Device.
- Positive shut-off
- Stem extension for underground

Product Range :

- Size: NPS 2"~ 24" , DN 50-600
- Pressure Rating: Class 150 -2500 LB , PN 10~400
- Design standard : API 6D ,API 599,EN13942
- Face To Face Dimension : API 6D , EN 558-1, EN 12982
  ASME B16.10.
- Connecting Dimensions : ASME B16.5 , ASME B16.47
  ASM B 16.25 , EN 1092-1 , EN 12627.
- End Connection : Flange ,BW.
- Body Materials : Carbon steel , Stainless Steel , Alloy Steel
  Duplex Stainless Steel , Special Alloy .

Slab Gate Valves

Design Feature:

- Single or double gate.
- Soft sealing seat or metal seal seat.
- Flanged end or welding end.
- Double block and bleed.
- Through Conduit.
- Full Bore.
- Automatic internal relief of body pressure.
- Emergency sealant injection system.
- Fire safe design
- Antistatic Device
- Cleaning Automatically.

Product Range :

- Size: NPS 2"~ 48" , DN 50-1200
- Pressure Rating: Class 150 -1500 LB , PN 10~250
- Design standard : API 6D , EN 13942.
- Face To Face Dimension : ASME B16.10,EN 558-1, EN12982
  API 6D.
- Connecting Dimensions : ASME B16.5 , ASME B16.47.
  ASM B 16.25 , EN 1092-1 , EN 12627.
- End Connection :Flange ,BW.
- Body Materials : Carbon steel , Stainless Steel ,Alloy Steel.
  Duplex Stainless Steel , Special Alloy .

I.V.I.T. S.r.l.
SEDE LEGALE: Corso Massimo D'Azeglio, 60 H 10126 Torino (TO)
SEDE OPERATIVA: Via Bologna, 220 – 10154 Torino (TO) – ITALY –
tel. 011.19323297 fax. 011.19323296 Email: info@ivit.it
P.IVA: 10818090010

ITALiana valvole industriali torino srl

Small forged Valves

Gate,Globe ,Check , Valves

Design Feature:

- Full port or reduced port design.
- Bolt bonnet ,welding bonnet or pressure seal bonnet
- Back seal design (gate,globe,valve)
- Stem is one-piece wrought material.(gate,globe valve)
- Solid wedge (gate valve),taperd or needle disc (globe valve). Lift or swing disc (check valve)
- Outside Screw and Yoke .
- Rising stem and non-rising stem
- Renewable Seat
- Extend bonnet For underground Service.

Check Valves

Product Range:

- Size : NPS 1/4" ~ 2" ,DN 8-50.
- Pressure Rating : Class 150 -2500 ,PN 10~400.
- Basic Design : API 602 ,EN ISO 15761,BS 5352.
- End Connection : BW ,SW,NPT,Flange.
- Body Materials : Carbon steel ,Alloy steel,Stainless steel.
- Duplex Stainless steel ,Special Alloy..

Globe Valves

Product Range:

- Size : NPS 1/4" ~ 2" ,DN 8-50.
- Pressure Rating : Class 150 -2500 ,PN 10~400.
- Basic Design : API 602 , EN ISO 15761,BS5352.
- End Connection : BW ,SW,NPT,Flange.
- Body Materials : Carbon steel ,Alloy steel,Stainless steel.
- Duplex Stainless steel ,Special Alloy.

Gate Valves

Product Range:

- Size : NPS 1/4" ~ 2" ,DN 8-50.
- Pressure Rating : Class 150 -2500 ,PN 10~400.
- Basic Design : API 602 , EN ISO 15761,BS5352.
- End Connection : BW ,SW,NPT,Flange.
- Body Materials : Carbon steel ,Alloy steel,Stainless steel.
- Duplex Stainless steel ,Special Alloy.

I.V.I.T. S.r.l.
SEDE LEGALE: Corso Massimo D'Azeglio, 60 H 10126 Torino (TO)
SEDE OPERATIVA: Via Bologna, 220 – 10154 Torino (TO) – ITALY –
tel. 011.19323297 fax. 011.19323296 Email: info@ivit.it
P.IVA: 10818090010

ITALiana valvole industriali torino srl

Strainer,Check Valves

Strainer

Design Feature:

- Bolted bonnet .
- Casting body ,Welded body , or forged body. .
- Y type or T type .
- Drain plug.
- Stainless steel filter screen.

Product Range :

- Size: NPS 1/2"~ 20" , DN 15-500 mm
- Pressure Rating: Class 150 -2500 LB , PN 10~400
- Design standard : ASME B16.34 , DIN standard.
- Face To Face Dimension : ASME B 16.10, EN558-1 EN12982 , Manufacturer standard.
- Connecting Dimensions : ASME B16.5 , ASME B1.20.1 ASM B 16.11 , EN 1092-1 .
- End Connection : Flange. Screw ,BW,SW.
- Body Materials : Carbon steel , Stainless Steel ,Alloy steel. Duplex Stainless Steel .

Check Valves

Design Feature:

- Bolt Bonnet or pressure seal bonnet design.
- Full port or reduced port design.
- Swing disc or tilting disc.
- Soft seal or metal to metal seal.
- Bonnet with Eye bolt.
- Lever & Weight counter optional.
- Renewable seat or welding seat.

Product Range :

- Size: NPS 1/2"~ 48" , DN 15-1200
- Pressure Rating: Class 150 -2500 LB , PN 10~400
- Design standard : API 6D ,BS 1868 ,EN13942 .
- Face To Face Dimension : API 6D , ASME B16.10 EN 558-1,EN12982.
- Connecting Dimensions : ASME B16.5 , ASME B16.47 EN 1092-1,EN 12627.
- End Connection : Flange , BW.
- Body Materials : Carbon steel , Stainless Steel , Alloy Steel, Duplex Stainless Steel , Special Alloy .

I.V.I.T. S.r.l.
SEDE LEGALE: Corso Massimo D'Azeglio, 60 H 10126 Torino (TO)
SEDE OPERATIVA: Via Bologna, 220 – 10154 Torino (TO) – ITALY –
tel. 011.19323297 fax. 011.19323296 Email: info@ivit.it
P.IVA: 10818090010

ITALiana valvole industriali torino srl

I.V.I.T. S.r.l.
SEDE LEGALE: Corso Massimo D'Azeglio, 60 H 10126 Torino (TO)
SEDE OPERATIVA: Via Bologna, 220 – 10154 Torino (TO) – ITALY –
tel. 011.19323297 fax. 011.19323296 Email: info@ivit.it
P.IVA: 10818090010

I.V.I.T. S.r.l.
SEDE LEGALE: Corso Massimo D'Azeglio, 60 H 10126 Torino (TO)
SEDE OPERATIVA: Via Bologna, 220 – 10154 Torino (TO) – ITALY –
tel. 011.19323297 fax. 011.19323296 Email: info@ivit.it
P.IVA: 10818090010